ALVT Series
Vortex Flowmeter
USER MANUAL

VaporTec®
Especialistas en Vapor

WWW.VAPORTEC.COM.VE

Contents

1 Measuring principle: 4
2 Installation 5
2.1 Identifying the Most Suitable Location 5
2.2 Installation straight pipe requirements 6
3 Wiring 10
3.1 Wiring for the 5-terminal board 11
3.1.1 Wiring for 3 wire pulse output 11
3.1.2 Wiring for 2 wire 4~20mA w/ HART 11
3.1.3 Wiring for RS485 12
3.2 Wiring for the 12-terminal board 12
3.2.1 Wiring for 3 wire pulse output 12
3.2.2 Wiring for 3 wire 4~20mA w/ HART 12
3.2.3 Wiring for 4 wire 4~20mA w/ HART 13
3.2.4 Wiring for RS485 13
3.3 Enclosure grounding and elimination of interference 14
3.4 Wiring Requirements 14
4 Display / User Interface 15
4.1 Introduction - Multi-Function LCD Display 15
4.2 Engineering Units 17
4.3 Introduction – Keypad/Button Functions 18
4.4 Displaying Totalized Flows 18
4.5 Operating Modes 19
5 Parameter Setting 20
5.1 Data Entry Procedure 20
5.1.1 Code setting 20
5.1.2 Numeric Entry 21
5.2 Setting list 22
5.3 Password setting instruction 26
6 RS485 Modbus Communication 28
6.1 Interface 28
6.2 Commands 30
6.3 Calculation of CRC parity code 32
6.4 Instrument float data format 32
6.5 Instrument float date byte sequence 32
6.6 Modbus error reponse 33
6.7 Examples of communication 34
7 HART communication protocol 36
7.1 HART commands 36
7.1.1 Command 0: Read transmitter unique identifier 36
7.1.2 Command 1: Read primary variable value (PV) 36
7.1.3 Command 2: Read primary variable’s current and percentage value 37

7.1.4 Command 3: Read primary variable current and dynamic variables 37
7.1.5 Command 6: Write polling address 38
7.1.6 Command 11: Read unique identifier associated with tag 38
7.1.7 Command 12: Read message 39
7.1.8 Command 13: Read tag, descriptor, date 39
7.1.9 Command 14: Read primary variable sensor information: device serial number and limits 40
7.1.10 Command 15: Read primary variable output information 40
7.1.11 Command 16: Read final assembly number 41
7.1.12 Command 17: Write message 41
7.1.13 Command 18: Write tag, descriptor, date 42
7.1.14 Command 19: Write final assembly number 42
7.1.15 Command 34: Write primary variable damping value 43
7.1.16 Command 35: Write primary variable range values 43
7.1.17 Command 36: Write primary variable upper limit value 44
7.1.18 Command 37: Write primary variable lower limit value 44
7.1.19 Command 40: Enter/Exit primary variable current mode 44
7.1.20 Command 45: Trim primary variable current DAC zero 45
7.1.21 Command 46: Trim primary variable current DAC gain 45
7.1.22 Command 140: Reset totalizer 46
8 Troubleshooting and repair 47
8.1 Troubleshooting and repair 47
8.2 Diagnostic Codes 49

1 Measuring principle:

Vortex flow sensing technology relies on measuring the number of vortex pulses generated by a bluff body immersed in the flow stream. A bluff body is positioned inside of the vortex flow meter; as flow pass over this bluff body, vortices are generated on either side of the bluff body – this phenomenon is known as the Von Karman Principle. The flow rate can be determined by measuring the number of vortices.

Illustration 1.2 - Von Karman Principle

The frequency of the vortices (f) is in direct proportion to the fluid velocity (v) and in inversely proportional to the width of the obstacle (d).

$$f=St*v/d \quad \text{(formula 1)}$$

$$v=fd/St \quad \text{(formula 2)}$$

St is the Strouhal Number, which is a dimensionless constant related to shape of the shedder element. This constant can be determined empirically.

Because d and St are constant, the fluid velocity (v) and the average velocity (v0) also have a certain relationship, ($v_0 = v/(1-1.25d/D)$). Therefore, v_0 is determined by the frequency of the shedded vortices (f). The ratio between quantity of vortices in a certain period of time and the volumetric flow through the meter is referred to as the instrument's (K) coefficient.

$$K=N/V \quad \text{(formula 3)}$$

2 Installation

2.1 Identifying the Most Suitable Location

(1) Ambient temperature

Avoid installing the flowmeter in locations where dramatic temperature changes could occur. If the meter is under direct sunlight or high heat, implementing effective heat shielding and/or venting is recommended.

(2) Atmosphere

Avoid installing the meter in locations having a corrosive atmosphere. If installation in corrosive atmospheres is unavoidable, make certain to insure that there is sufficient venting.

(3) Vibration

Avoid installing the meter in location where there are strong vibrations present. If there is ambient vibration present on the pipeline where the meter is mounted, make use of vibration dampening pipe mounts/clamps.

(4) Caution

(a) Make certain that all screws and bolts are fully tightened.

(b) Make sure that all connections points are free of leaks.

(c) The process pressure should not exceed the meter’s rated pressure.

(d) Once the meter is under pressure, do not unscrew any bolts and screws.

2.2 Installation straight pipe requirements

Type of Obstruction	Illustration
None	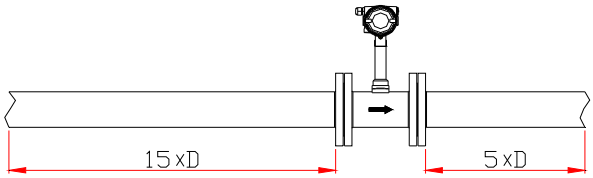
Reducer bushing	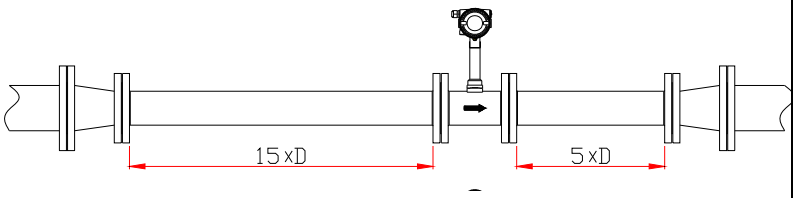
Diffuser Bushing	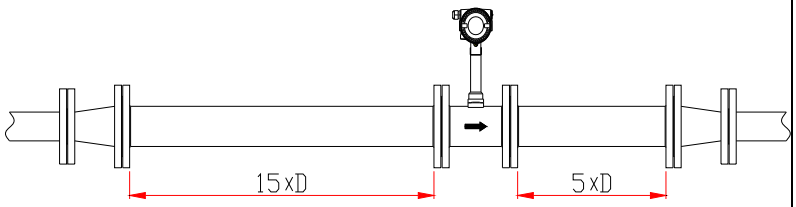
Elbow	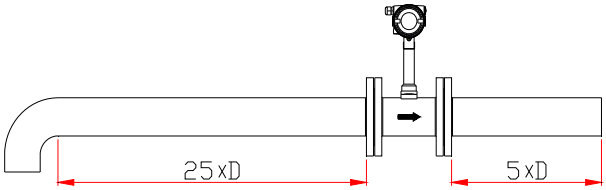
Two Elbows in the Same Plane	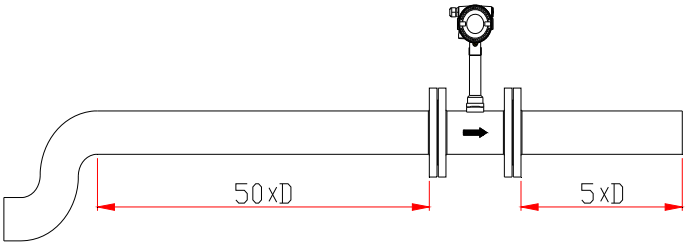

Valve Downstream of Meter	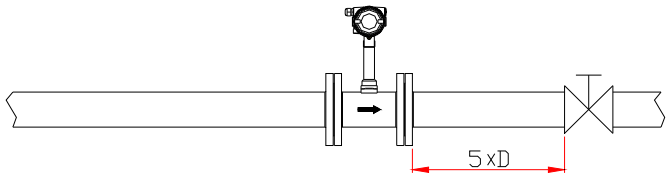
Valve Upstream of Meter	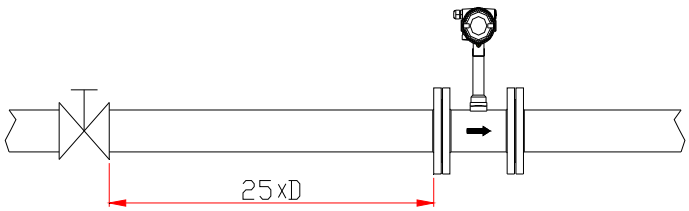
Pressure sensor: 2~7 Φ downstream of meter **Temperature sensor: 1~2 Φ downstream of pressure sensor**	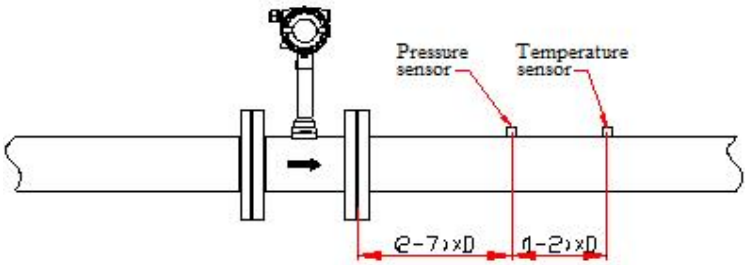
Roots blower or piston blower or air compressor upstream of meter	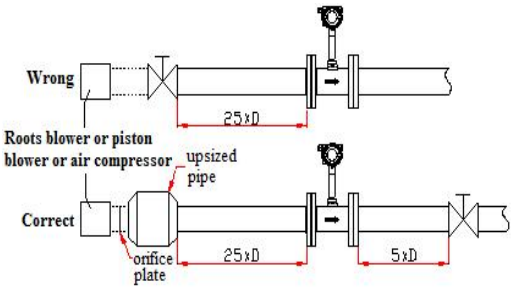 A roots blower or piston blower or air compressor or pump upstream, of the meter could cause vibration of the fluid itself. To eliminate this vibration, please install an orifice plate or an upsized pipe ≈ 25Φ upstream of the meter. The valve should be located downstream of the flowmeter in this situation.

Piston pump upstream of the meter	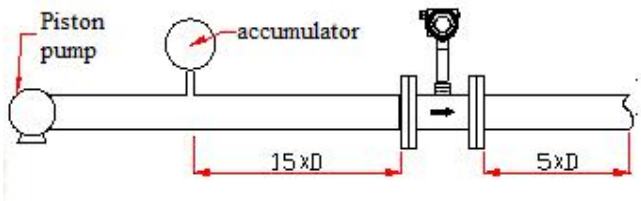 Please install a accumulator to reduce the vibration
Pipe tee upstream of the meter	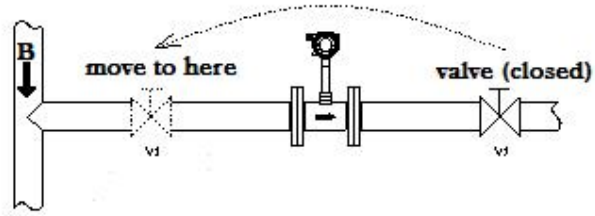 When there is a tee upstream of the flowmeter and a valve downstream the meter is shut (see above), the fluid will all flow in direction B, but the meter may still have read if it is detecting the pulsating pressure. Please move the valve upstream of the meter to avoid this situation
Gaskets should not protrude into the pipeline	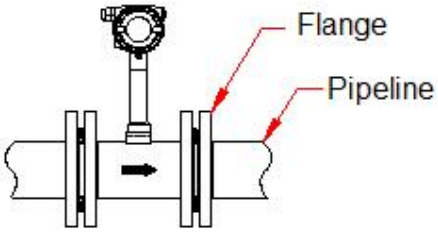
Heat insulation: If the fluid high temperature, the heat insulation material should not cover the heat dissipation hole on flow meter	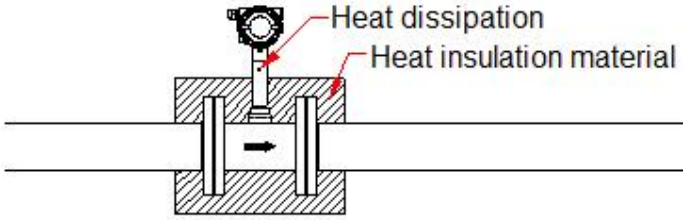

Pipe cleaning: If the pipeline needs to be cleaned, please substitute a pipe spool in place of the flowmeter to avoid damage to the meter from the cleaning solvent	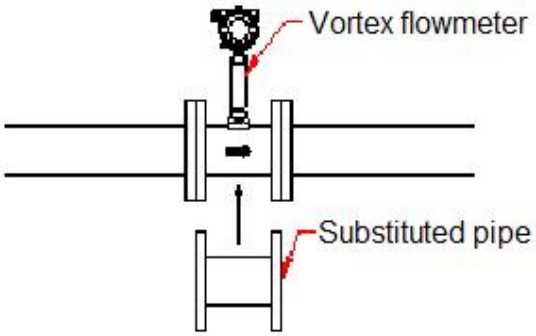

3 Wiring

The ALVT vortex flowmeter is provided with 2 different terminal block boards, depending on which options are ordered with the meter. Please refer to Illustration 3.1 and 3.2 below.

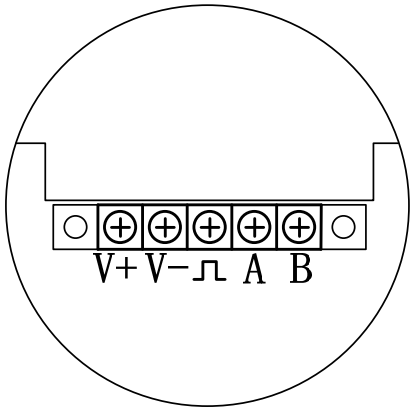

Illustration 3.1 - 5-terminal board

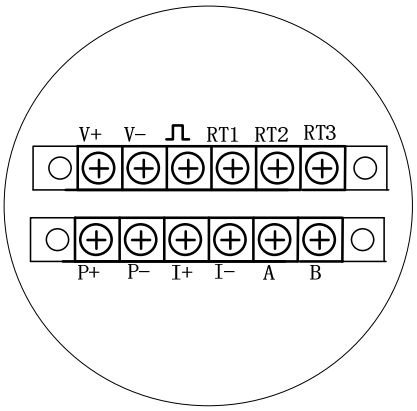

Illustration 3.2 - 12-terminal board

For the boards illustrated above, terminals labeled V+ and V- are for power. The ⎍ terminal is for the pulse output. The A & B terminals are the “+” and “-” connections, respectively, for RS485/Modbus communication. The I+ and I- are the + and – for 3-wire or 4-wire 4~20 mA outputs. Terminals RT1, RT2, RT3 are for external RTD sensors. The P+ and P- terminals are inputs for the pressure transmitter. The ALVT multi –variable version has a built in RTD and pressure sensor, so users are not required make connections for temperature or pressure compensation.

3.1 Wiring for the 5-terminal board

3.1.1 Wiring for 3 wire pulse output

The 3-wire pulse output configuration requires a power source of 13.5~42V_{DC}. The ALVT provides a current pulse output with a 50% duty cycle. If the pulse receiving instrument requires a voltage pulse, please add a 500~1000 Ω, ½ W resistor between the "⎍" and "V-" terminals.

Please refer to Illustration 3.3 picture below for the 3-wire pulse output wiring diagram.

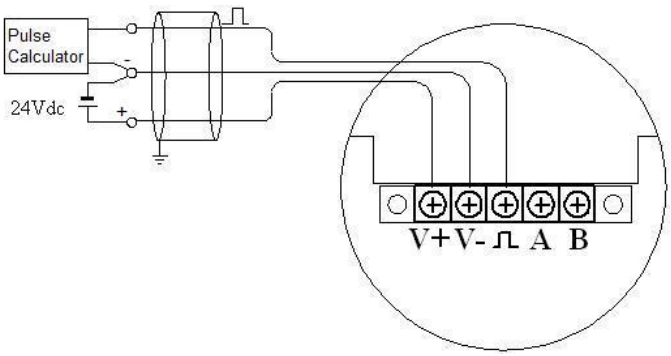

Illustration 3.3 - 3-wire pulse output wiring

3.1.2 Wiring for 2 wire 4~20mA w/ HART

When there is not temperature and pressure compensation and the power supply is 24V_{DC}, the maximum load for the analog 4~20mA is 500 Ω. When there is temperature and pressure compensation and the power source is 24V_{DC}, the maximum load is 400 Ω. When using a HART communicator, make certain to add a 250 Ω load resistor

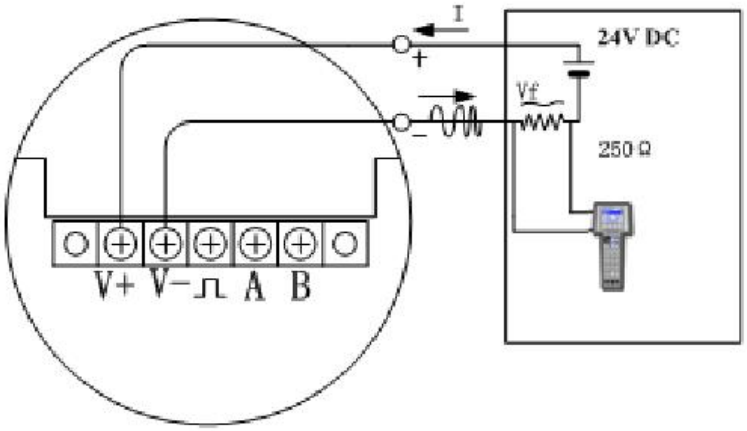

Illustration 3.4 - Wiring for 2 wire 4~20mA w/ HART

3.1.3 Wiring for RS485

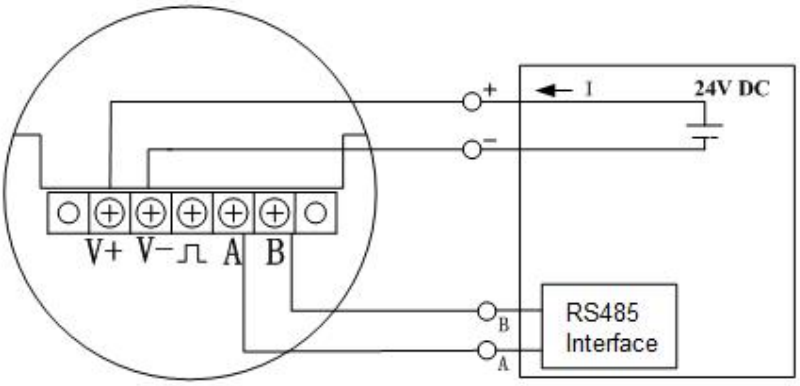

Illustration 3.5 - RS485 Wiring

3.2 Wiring for the 12-terminal board

3.2.1 Wiring for 3 wire pulse output

The 3-wire pulse output requires a 13.5~42V_{DC} power supply. The ALVT provides a current pulse output with a 50% duty cycle. If the pulse receiving instrument requires a voltage pulse, please add a 500~1000 Ω, ½ W resistor between the "⎍" and "V-" terminals.

Illustration 3.6 - 3-wire pulse output wiring

3.2.2 Wiring for 3 wire 4~20mA w/ HART

When the power supply is 24V_{DC}, the max load for the analog 4~20mA is 500 Ω.

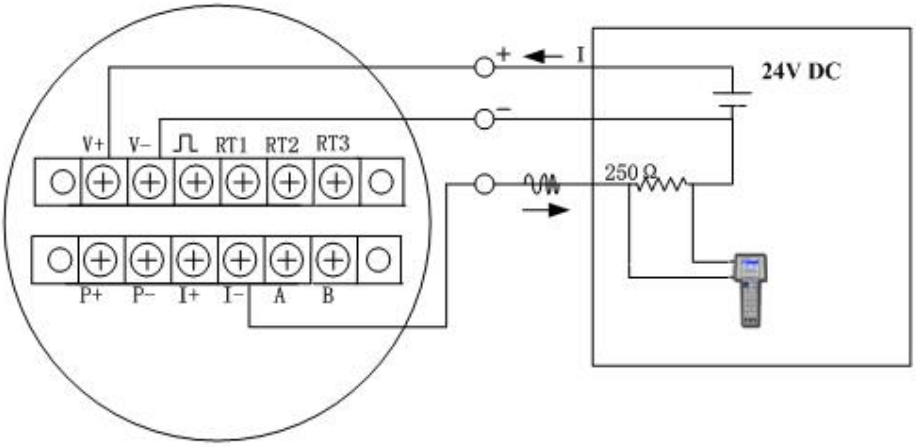

Illustration 3.7 - Wiring for 3-wire 4~20mA w/ HART

3.2.3 Wiring for 4 wire 4~20mA w/ HART

When the power supply is $24V_{DC}$, the max load for the analog 4~20mA is 500 Ω.

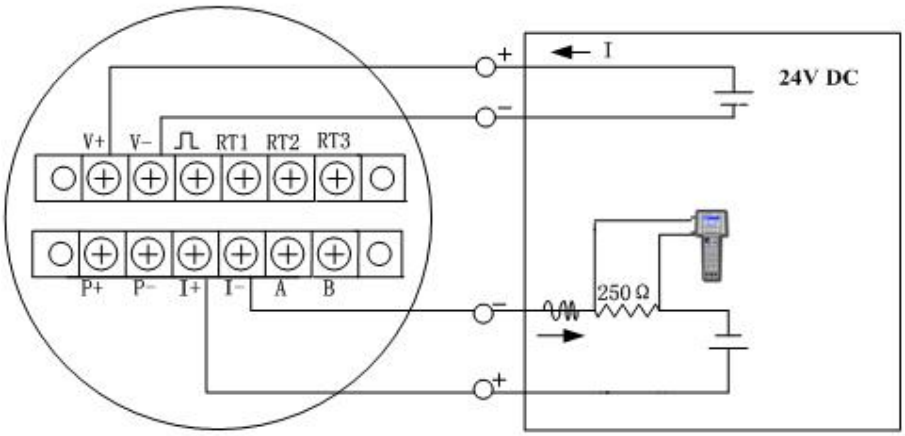

Illustration 3.8 -: Wiring for 4-wire 4~20mA w/ HART

3.2.4 Wiring for RS485

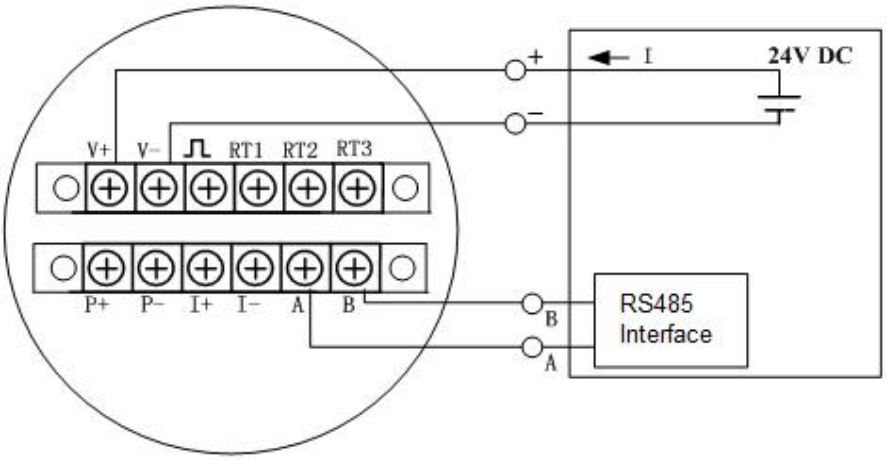

Illustration 3.9 - RS485 Wiring

3.3 Enclosure grounding and elimination of interference

In this product, the power supply for the signal processing circuit is transferred from the external power supply through DC-DC isolation transformer with advanced grounding technology. The field interference frequency is well isolated.

When using this product, the "-" power supply terminal should **not** be connected to Earth ground .When this product is used in an environment where strong EMI/RFI is present , the enclosure should be connected to the earth using a grounding cable , so that the interference can be eliminated.

3.4 Wiring Requirements

1) Do not make wiring connections in an explosive environment when the power is on.

2) Open the rear cover first, and then feed the cable into the rear compartment of the enclosure through the water-proof cord grip/cable gland.

3) Make all wiring connections in accordance with sections 3.1 and 3.2 of this manual.

4) Refer to illustration 3.10 below for the optimum wiring configuration to prevent water from entering the enclosure via the cable.

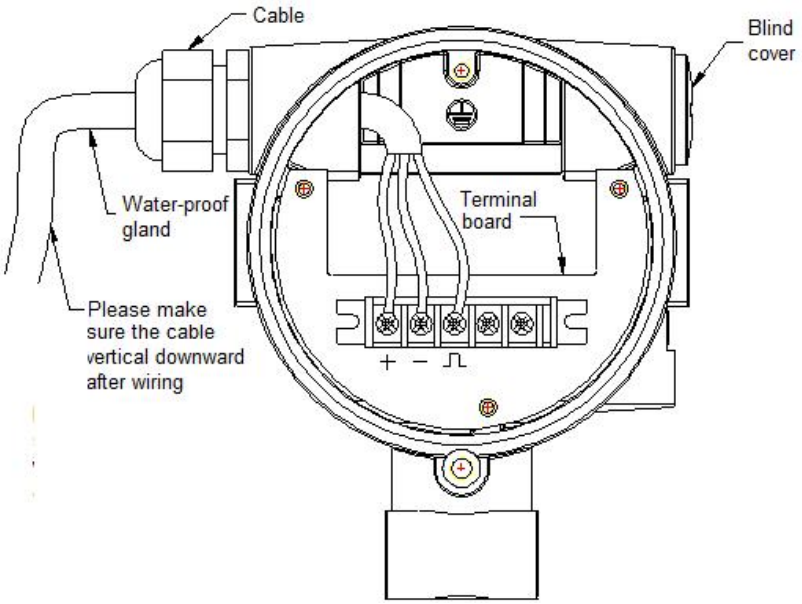

Illustration 3.10 – Wiring Considerations

4 Display / User Interface

The ALVT series vortex flowmeter's display is used for displaying the process variable measured by the instrument and for parameter setting. Various combinations of measured variables including mass or volumetric flow, temperature, and pressure may be displayed, and there are multiple engineering units available for displaying each of these process variables. Parameter programming is achieved via the display module's 3-button keypad.

4.1 Introduction - Multi-Function LCD Display

The ALVT Series Vortex Flowmeter's multi-function LCD display may display information such as raw frequency, momentary flow rate, and total accumulated flow. Versions of the instrument that include auto pressure/temperature compensation can also display other variables including temperature, pressure, density, and mass flow rate. Please refer to Illustration 4.1 below showing the LCD display.

Illustration 4.1 - LCD display

The LCD display contains either two three lines of information. In versions that include pressure/temperature compensation, the first line is for the measured variable; it will indicate what variable is being displayed in lines 2 and 3. The second line may be configured to indicate frequency, temperature, pressure or momentary flow. The third line is used to indicate total accumulated flow. Versions of the meter without pressure/temperature compensation do not include the top line for indicating the variable and will always show flow rate on the first line and totalized flows on the second. Please reference Illustration 4.2 below

Illustration 4.2 - Momentary flow and Total Accumulated flow

Versions of the ALVT that feature pressure/temperature compensation can also indicate the mass flow of saturated steam or superheated steam via calculation. When indicating mass flow, the first line of the LCD display will display an “M” character indicating MASS, as shown in Illustration 4.3.

Illustration 4.3 - Display showing instantaneous and accumulated total mass flow of steam

The version of the ALVT that includes pressure/temperature compensation can also indicate temperature, pressure, and density. The displayed variable is easily changed via use of the display module’s keypad. Illustration 4.4 shows an example of the display when it is indicating temperature.

Users may also make use of the circular display mode, where the display automatically rotates between all measured variables one-by-one.

Illustration 4.4 - Display showing temperature reading

You can also set the lower row to display multiple variables in circular display mode.

4.2 Engineering Units

Please refer to Table 4.1 below for a general overview of the available engineering units for each measured variable. As indicated by the chart, the units of density may be different based on the method of calculation. When using the set-parameter compensation method, the units of density are set by user. When using automatic pressure/temperature compensation, the units of measure for density are kg/m^3. Please reference to section 2 of this manual for details on setting the parameters.

If alternate units of measure such as ft^3/m or GPM are required, please contact the factory. Virtually any engineering units are possible, but some minor adjustments to the software must be made at the factory.

According to the formula for calculating the volumetric flow rate:

$$Q_N = 3.6 * f/K$$

When displaying volumetric flow, the units of measure are determined by the units of K-factor, which is set by the user. For example, if the K=7.5548 pulses per liter (⎍/L), the units of momentary volume flow displayed should be L/hour and the unit of accumulated total volume is L

According to the formula for calculating the mass flow:

$$Q_N = 3.6 * f/K * \rho$$

When displaying volumetric flow, the unit is decided by the units of density (ρ) and the user-set K-Factor. Units of momentary mass flow may be Kg/hour or Tons/hour. The unit of corresponding accumulated flow would then be kg or Ton.

Subject	Variable	Unit	Circular display code
TOTAL	Total flow	Nm^3 , m^3 ,L, kg or t	01
TEMP	Temperature	℃	02
PRES	Pressure	MPa or kPa	03
FREQ	Frequency	Hz	04
DENS	Density	kg/ m^3	05

Table 4.1- Engineering units

4.3 Introduction – Keypad/Button Functions

The three buttons located above the LCD have different functions different during run mode and parameter setting mode. The buttons (Please reference illustration above) located on the top of display, are labeled with a ↔ symbol, a ↕ symbol, and a ↵ symbol

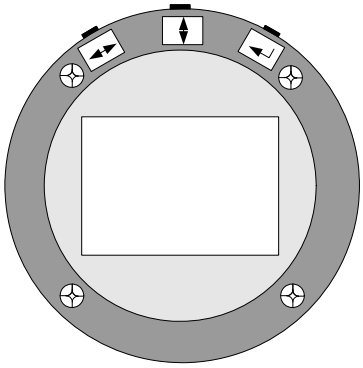

Picture 4.5 buttons

During run mode, the ↕ button may be used to switch between available display content. The ↔ button can be used to switch to momentary flow rate. The ↵ button is not functional when the flowmeter is in run mode.

When the flowmeter is in parameter setting mode, the ↔ button is used to move the cursor left or right. The ↕ button is used move to up down, or increment/decrement a numeric value. The ↵ button is used to confirm an entry. All parameter and code setting for the ALVT is achieved via these 3 buttons

4.4 Displaying Totalized Flows

The ALVT can display up 9 digits left to decimal point and 3 digits to the right. When the there is more than six digits, the total flow reading will be split into two and displayed in sequence. The first part of the sequence will display the right-most digits and the second part of the sequence will display the remaining digits to the left. The ↔ button may be used to switch between the right digits and left digits. The left digits will be displayed with a mark of “x1000”. Please refer to Illustration 4.6 below:

Illustration 4.6 – When displaying the left digits, an “x1000” mark is displayed

To display the right digits, press the ↔ button and the display will read out as shown

illustration 4.7 below.

Illustration 4.7 - Displaying the right-most digits

The readouts shown in Illustrations 4.6 and 4.7 would indicate a total flow of 569864.581 kg.

4.5 Operating Modes

The ALVT series vortex flowmeter has three different operating modes

- Run mode
- Parameter setting mode
- Calibration mode

In run mode, the LCD display of flowmeter will indicate parameters or measurement results as discussed in the prior sections of this manual. In parameter setting mode, users may adjust the parameters while the flowmeter is still measuring without any effect the measurement.

Calibration mode is typically only used at the factory when the instrument before the instrument is delivered or if it has been returned for re-calibration. The displayed instantaneous flow & the 4-20 mA output as well as the temperature & pressure inputs are all calibrated against traceable standards at the factory. In order to recalibrate in the field, traceable calibration standards must be available. If these standards are available, please contact the factory for assistance with performing field re-calibrations.

.

5 Parameter Setting

Note: Every ALVT digital vortex flowmeter has been pre-set at the factory prior to delivery based on the end user's stated application requirements. Under normal circumstances, the end-user will not need to access the parameter setting menu to make changes. If changes do need to be made, they should be done in strict accordance with the procedures outlined in this section of the manual.

To change parameters such as fluid media and output type; a procedure referred to as "Code setting" is described in this manual. In order to change values such as the size of pipeline, the flow range, and the amount of damping; the procedure is referred to as "Numeric entry".

In parameter setting mode, the ↔ button is used to move the cursor left or right. The ☐ button is used move to up down, or increment/decrement a numeric value. The ↵ button is used to confirm an entry.

5.1 Data Entry Procedure

As mentioned above, there are two different types of data that may be entered via the display module's keypad; Code Setting for parameters such as output type and compensation method and Numeric Entry for parameters like pipe size and high/low flow limit. Section 2.1.1 will detail the Code Setting procedure and section 2.1.2 will discuss numeric entry.

5.1.1 Code setting

To begin the code setting procedure from the instrument's Run Mode, press and hold down the ↵ button and then press the ☐ button (See Illustration 5.1 below).

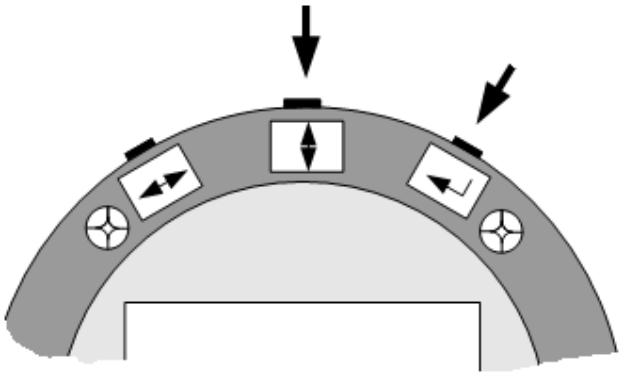

Illustration 5.1 - Enter or quit code setting

Next, the LCD display will display two lines of code; the upper line indicates the parameter name code of the parameter that is being viewed while the lower line indicates what the parameter value is presently set to. Section 2.2 of this manual provides a complete list of the parameter name codes and their available parameter value settings.

For example, in Illustration 5.2 below, location code 01 shown in the top line is indicating that

the “Fluid media phase” parameter is being viewed. The value code 02 in the lower line indicates that the medium is “liquid”.

.

Illustration 5.2 - Code setting

5.1.2 Numeric Entry

To begin the numeric entry procedure from the instrument’s Run Mode, press and hold down the ↵ button, and then press the ↔ button. (See illustration 5.3 below).

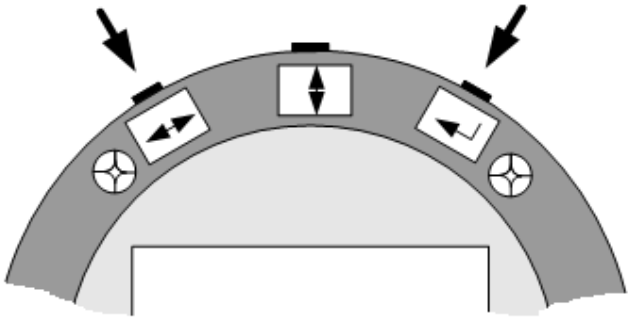

Illustration 5.3 - Enter or quit digital setting

The upper line on the LCD display indicates the numeric parameter name code of the parameter being viewed and the lower line indicate the current value of the numeric parameter. The blinking digit is the number that is being modified. Section 5.2 of this manual provides a complete list of the numeric parameter name codes and the range of values that each parameter may be set to.

For example, refer to Illustration 5.4 below. The “001” in the upper line indicates that the “Upper limit of pressure” parameter is being viewed and the “4.0000000” displayed in the lower line is indicating that this parameter’s value is set to 4.00Mpa , which will also to the full-scale 20mA output.

Illustration 5.4 – Numeric entry display

While the numeric entry codes are being viewed, the ↔ button may be used to switch between which numbers on the display is blinking, and the ▢ button is used to increment the value of number that is blinking. Pressing the ↵ button will confirm the parameter name code selection and cause the right-most digit of the parameter value code to start blinking. The numeric value may be modified in the same manner as the numeric parameter name code; pressing the ↵ button will confirm the parameter value selection and then advance the screen to the next numeric parameter name code.

To exit code setting, press and hold the ↵ button and then press the ▢ button. Upon exiting code setting, the flowmeter will save the new settings to its' internal flash memory and return the LCD display to run mode.

5.2 Setting list

Chart 5.1 Code setting address

Code setting address	Item	Code	Description of code
1	Medium type	1	Gas
		2	Liquid
02	Density compensation	00	Do not need density compensation , indicate volume flow
		01	Density as set by user
		02	Density compensation based on measured pressure (For measurement of saturated steam, only for P≤2Mpa. If P>2Mpa , the function code is 05)
		03	Density compensation based on measured temperature(For measurement of saturated steam)
		04	Density compensation based on temperature and pressure compensation (For superheated steam)
		05	ρ=A+BP (Density compensation based on

			measured pressure)
		06	ρ=A+BT (Density compensation based on measured temperature)
		07	Reserved for future use
		08	Calculate normal volume via temperature and pressure compensation,(The normal definition is T=20 ℃,P=101.325 KPa)
		09	AGA-8 to calculate compressibility factor
05	Output	01	Pulse (Please refer to D008 for K factor)
		02	4~20mA or HART enabled 4~20mA
		03	200-1000HZ frequency output, set what to output in C06
		04	Totalizer impulse; set volume/pulse in D013
06	200-1000Hz output parameter	00	Flow rate
		01	Temperature
		02	Pressure
07	Damping	01~99	1~99 seconds
08	Instrument number	00~99	For Modbus
		00~15	For HART communication

Code setting address	Item	Code	Description of code
09	Baud rate	01	1200 no parity 1 stop bit
		02	1200 even parity 1 stop bit
		03	2400 no parity 1 stop bit
		04	2400 even parity 1 stop bit
		05	4800 no parity 1 stop bit
		06	4800 even parity 1 stop bit
		07	9600 no parity 1 stop bit
		08	9600 even parity 1 stop bit
		09	19200 no parity 1 stop bit
		10	19200 even parity 1 stop bit
		11	1200 odd parity 1 stop bit
		12	2400 odd parity 1 stop bit
		13	4800 odd parity 1 stop bit
		14	9600 odd parity 1 stop bit
		15	19200 odd parity 1 stop bit
		16	38400 no parity 1 stop bit
		17	38400 even parity 1 stop bit
		18	38400 odd parity 1 stop bit
		19	57600 no parity 1 stop bit
		20	57600 even parity 1 stop bit
		21	57600 odd parity 1 stop bit
		22	115200 no parity 1 stop bit
		23	115200 even parity 1 stop bit
		24	115200 odd parity 1 stop bit
10	Time unit for flow rate	00	/s
		01	/min
		02	/h
11	Mass unit	01	kg
		02	ton
		03	lb
12	Volume unit for flow rate	01	m3
		02	L
		03	ft3
		04	US gal
		05	UK gal
13	Pressure unit	01	MPa
		02	kPa
		03	Psi
		04	Bar

Code setting address	Item	Code	Description of code
14	Temperature unit	01	°C
		02	°F
		03	°K
15	Number of digits to the right of the decimal for total flow	00~05	00：No digits to the right for total flow
			01~05：1~5 digits to the right for total flow
16	Parameter displayed on top row of LCD	01	Flow rate
		02	percentage of full-scale flow rate
17	Parameter displayed on bottom row of LCD	00	No display (blank)
		01	Total flow
		02	Temperature
		03	Pressure
		04	Density
		05	Frequency
18	Density unit	01	Kg/m3
		02	lb/ft3
30	Timing between parameters for circular display mode	00~30	00：circular display mode off
			1~30：1~30 seconds between changes of the displayed parameter
31	First parameter displayed in circular display mode	00~05	00：circular display mode off
			01~05：see chart 4.1
⋮	⋮	⋮	…..
35	Last parameter displayed in circular display mode	00~05	Same as above
38	Sequence of float data type (RS485 communication)	01	LL_LH_HL_HH
		02	HH_HL_LH_LL
		03	LH_LL_HH_HL
		04	HL_HH_LL_LH
47	Password function	0	off
		1	on
48	Set password	0	Keep the password
		1	Change the pass word
49	Spectrum analysis	0	Working status
		12	spectrum analysis checking
50	Totalizer reset	0	Reset totalizer to 0
		1	Default
55	Times of over total flow	00~99	Read only
60	Restore to backup date	6	Restore to backup date
61	Save setting backup	16	Save current settings for backup

Note:

1) If the units for flow rate are changed or if measurement is changed from volumetric flow rate to mass flow, users can reset the total flow to 0 or record the current total flow

2) Total flow= (time of over total flow)* (max display of total flow) + (current total flow reading)

Chart 5.2 Numeric setting addresses

Numeric setting address	Item	Range of values	Description of code
001	Max pressure	[-99999，999999]	Upper limit for inlet/outlet pressure
002	Min pressure	[-99999，999999]	Lower limit for inlet/outlet pressure
003	Max temperature	[-99999，999999]	Upper limit for inlet/outlet temperature
004	Min temperature	[-99999，999999]	Lower limit for inlet/outlet temperature
005	Preset density	(0，999999]	When C02=01, the meter will use this density, units according to setting
008	K factor	（0，999999]	K coefficient determined at calibration, unit is pulses/Liter. Flow=3.6*freq/K
009	Max flow rate	（0，999999]	Unit same as flow rate, Max/min flow rate of 4~20mA and 200~1000Hz output
010	Min flow rate	[0，999999]	
013	Pulse factor for total flow	(0，999999]	Used when freq output is configured as totalizer impulse
014	Ambient pressure	(0，999999]	Units according to setting
015	Pipe size	(0，999999]	unit is mm
021	Small signal cutoff	[0，999999]	unit is Hz
030	specific density of compressibility factor	[0.55，0.90]	For calculation of compressibility factor of natural gas
031	mol% of N2 and H2	[0，0.1]	For calculation of compressibility factor of natural gas
032	mol% of CO2	[0，0.3]	For calculation of compressibility factor of natural gas
033	Higher heating value	[20，48]	KJ/mol，For calculation of compressibility factor of natural gas

Note:

Max freq output=10KHz, the pulse factor for total flow should be set properly according to the current total flow.

5.3 Password setting instruction

There is no factory default password in a new ALVT vortex flowmeter. Users can set a password following the procedure below.

Enter code setting mode and set C47 to 01, confirm, and then exit. Next, enter the password setting interface as shown in Illustration 5.5

SPC

0000

Illustration 5.5 - Password setting interface

To set a new password, the correct password must be input twice; the password will become effective only if the both entries are the same. If both entries are not the same, the procedure will need to be repeated from the start. If power is lost during the process of changing the password, the password will be automatically set to 2000 as the default. When a password becomes effective, users must input the correct password before accessing the parameter setting menus.

SPI

0000

Illustration 5.6 - Password input screen

6 RS485 Modbus Communication

6.1 Interface

- The communication interface is RS485 type; the range of available baud rates is 1200~115200.
- The Modbus output is accessed via wiring terminals “A” and “B”.
- The ALVT’s Modbus output is MODBUS-RTU type.

The Modbus signal follows the format: Address code - function code – date segment – CRC calibration code. The space between two characters should not exceed one character, or it will be considered to be the beginning of a new message or the end of an old message. The message is combined with hexadecimal arrays.

- Definition of the dates: Please reference to the chart 6.1 below.

Chart 6.1 Address of the displayed date

Register address	Usage	Register type	Data type
0~1	Flow rate	Read only	Float
2~3	Frequency	Read only	Float
4~5	Reserved	Read only	Float
6~7	Pressure	Read only	Float
8~9	Temperature	Read only	Float
10~11	Density	Read only	Float
12~13	Reserved	Read only	Float
14~15	Reserved	Read only	Float
16~17	Reserved	Read only	Float
18~19	Reserved	Read only	Float
20~21	Reserved	Read only	Float
22~23	Reserved	Read only	Float
24~25	Total flow	Read only	Float

The data that may be displayed includes flow rate, frequency, pressure, temperature, density and total flow. If the meter does not have density compensation, then the pressure and temperature readings will both always be 0. The parameter data shown in the above chart can be read by using function code 03 and the corresponding address of the desired data field.

The data addresses are as shown in the below table:

Chart 6.2 Register addresses for code setting

Register	Usage	Range	Register Type	Data format
1000	Fluid type C01	1~2	Read only	Short
1001	Density compensation C02	0~9	Read/Write	Short
1004	Output C05	1~4	Read/Write	Short
1005	200-1000Hz output parameter C06	1~3	Read/Write	Short
1006	Damping C07	1~99	Read/Write	Short
1007	Instrument number C08	HART(0~15) Modbus(1~99)	Read	Short
1008	Baud rate C09	1~24	Read	Short
1009	Unit of time C10	0~2	Read/Write	Short
1010	Mass unit C11	1~3	Read/Write	Short
1011	Volume unit C12	1~5	Read/Write	Short
1012	Pressure unit C13	1~4	Read/Write	Short
1013	Temperature unit C14	1~3	Read/Write	Short
1014	Right digits number for total flow C15	0~5	Read/Write	Short
1015	Upper row display parameter C16	1~2	Read/Write	Short
1016	Lower row display parameter C17	0~5	Read/Write	Short
1017	Density unit C18	1~2	Read/Write	Short
1029	Timing between parameters for circular display mode C30	0~30	Read/Write	Short
1030	First parameter displayed in circular display mode C31	0~5	Read/Write	Short
1031	Second parameter displayed in circular display mode C32	0~5	Read/Write	Short
1032	Third parameter displayed in circular display mode C33	0~5	Read/Write	Short
1033	Fourth parameter displayed in circular display mode C34	0~5	Read/Write	Short
1034	Fifth parameter displayed in circular display mode C35	0~5	Read/Write	Short
1035	C36	0~1	Read/Write	Short
1036	C37	0~10	Read/Write	Short
1037	Sequence of float C38	1~4	Read/Write	Short
1046	Password function C47	0~1	Read	Short
1047	Set password C48	0~1	Read	Short
1048	Spectrum analysis checking C49	0~12	Read/Write	Short
1049	Reset totalizer to 0 C50	0~1	Read/Write	Short
1050	C51	0~0	Read/Write	Short
1051	C52	0~99	Read/Write	Short
1052	C53	0~0	Read/Write	Short
1053	C54	0~0	Read/Write	Short

1054	Time over totalflow C55	0~0	Read only	Short
1059	Restore to backup date C60	0~99	Read/Write	Short
1060	Save setting backup C61	0~99	Read/Write	Short

Users may use function codes 04 and 06 to access to the above addresses for code setting.

Numeric register addresses are shown below.

Chart 6.3 Register addresses for numeric values

Register	Usage	Range of values	Register Type	Data format
2000~2001	D001 Max pressure	-1e5~1e6	Read/Write	Float
2002~2003	D002 Min pressure	-1e5~1e6	Read/Write	Float
2004~2005	D003 Max temperature	-1e5~1e6	Read/Write	Float
2006~2007	D004 Min pressure	-1e5~1e6	Read/Write	Float
2008~2009	D005 Density	0~1e6	Read/Write	Float
2014~2015	D008 K factor	0~1e6	Read/Write	Float
2016~2017	D009 Max flow rate	0~1e6	Read/Write	Float
2018~2019	D010 Min flow rate	0~1e6	Read/Write	Float
2024~2025	D013 Factor for total flow output	0~1e6	Read/Write	Float
2026~2027	D014 Ambient pressure	0~1e6	Read/Write	Float
2028~2029	D015 Pipe size	0~1e6	Read/Write	Float
2040~2041	D021 Small signal cutoff	0~1e6	Read/Write	Float
2058~2059	D030 Specific density	[0.55，0.90]	Read/Write	Float
2060~2061	D031 mol% of N2 and H2	[0，0.1]	Read/Write	Float
2062~2063	D032 mol% of CO2	[0，0.3]	Read/Write	Float
2064~2065	D033 Higher heating value	[20，48]	Read/Write	Float

The chart above indicates the register address, usage of the register, range of values, read/write register type and data type. The above registers are all holding registers; the supporting function code is 03,04,06,16.

6.2 Commands

Function codes 03 and 04 are the supported codes for reading the registers. Function code 06 is used for writing to a single register. Function code 16 is for writing to multiple registers. Function code 06 is supported for writing short data only. Function code 16 is supported for writing both short and floats data types.

Function code 03 – Read register

Request	Response
01 : Address	01: Address
03 : Function code	03 : Function code
00 : Register address upper	04 : Number of bits
00 : Register address lower (display the address)	80 : Data 1

00 : Register number upper	04 : Data 2
02 : Register number lower	80 : Data 3
CRCL : CRC Parity code lower	80 : Data 4
CRCH ： CRC parity code upper	CRCL : CRC Parity code lower
	CRCH ： CRC parity code upper

Note: To read a float data register, the quantity of the register address(s) and the value should be read, otherwise an error response will be generated.

Function code 04 – Same as function code 03

Function code 06 – write single register

Request	**Response**
01 : Address	01: Address
06 : Function code	06 : Function code
00 : Register address upper	00 : Register address upper
01 : Register address lower (code setting address)	01 : Register address lower
00 : Value higher	00 : Value higher
04 : Value lower	04 : Value lower
CRCH ： CRC parity code upper	CRCH ： CRC parity code upper
CRCL : CRC Parity code lower	CRCL : CRC Parity code lower

Note: Function code is only supported for writing short dater.

Function code 16- write multiple registers

Request	**Response**
01 : Address	01: Address
10H : Function code	10H : Function code
00 : Register address upper	00 : Register address upper
01 : Register address lower (digital setting address)	01 : Register address lower
00 : Quantity of upper register	00 : Quantity of upper register
02 : Quantity of lower register	02 : Quantity of lower register
04 : Quantity of values	CRCH ： CRC parity code upper
86h : Value 1	CRCL : CRC Parity code lower
00 : Value 2	
00 : Value 3	
48H: Value 4	
CRCH ： CRC parity code higher	
CRCL : CRC Parity code lower	

Note: Function code 16 is supported to write both short and float data. However, for float data, the first register address and the quantity of the registers must be even, or writing is not permitted.

6.3 Calculation of CRC parity code

Request	Response
01 : Address	N1 CRC=0FFFFH is initial value
10 : Function code	N2 XOR operation the CRCL and N1
00 : Register address upper	N3 CRC move 1 bit right , if move out is 1 bit
01 : Register address lower	N4 CRC=CRC XOR A001H
00 : Register quantity upper	N5 if move out is 0 , CRC=CRC
04 : Register quantity lower	N6 Move right 8 times to finish the N1 calculation
04 : Data quantity	N7 …
80 : Data 1	N8 XOR operation the CRCL and N11
04 : Data 2	N9 CRC move 1 bit right , if move out is 1 bit
80 : Data 3	N10 CRC=CRC XOR A001H
80 : Data 4	N11 if move out is 0, CRC=CRC
CRCL : CRC Parity code lower	Move right 8 times to finish the N11 calculation
CRCH ： CRC Parity code upper	Get the CRC calibration value

6.4 Instrument float data format

The storage sequence of the 4-bit float format is as below:

Address: 0 1 2 3

Content: MMMMMMMM MMMMMMMM EMMMMMMM SEEEEEEE

Using the IEEE standard method, do not store 1 on the top digit, a top digit of 1 means negative. A top digit of 0 indicates positive. The 23 mantissas and a 1 on the top digit, which is concealed, constitute a 24-bit fixed point true form decimal, which is a decimal having mantissas < 1 and ≥ 0.5. The lowest 8 bits are the exponent-marker using shift code method. The exponent marker equals to the actual value minus 127. For example: 7=86H-7FH, -10=75H-7FH

e.g.: 100=0x00,0x00,0x42,0xc8

-100=0x00,0x00, 0xc2,0xc8

0=0x00.0x00.0x00.0x00 (exponent-marker is 0, the number is 0)

6.5 Instrument float date byte sequence

Code setting C38 is used for setting the float date byte sequence.

Float type data will occupy 4 bytes (2 registers). To set the byte order of the float data, please modify the register as follows:

1: LL_LH_HL_HH - the lower 16 register bytes come first, the lower 8 bytes within the 16 bytes come first.

eg: 100=0x00,0x00, 0xc8, 0x42

-100=0x00,0x00,0xc8,0xc2

2: HH_HL_LH_LL - the higher 16 register bytes come first; the higher 8 bytes within the 16 bytes come first.

eg: 100=0x42,0xc8,0x00,0x00

-100=0xc2,0xc8 ,0x00,0x00

3: LH_LL_HH_HL - the lower 16 register bytes come first, the higher 8 bytes within the 16 bytes come first.

eg: 100=0x00,0x00,0x42,0xc8

-100=0x00,0x00,0xc2,0xc8

4: HL_HH_LL_LH - the higher 16 register bytes come first, the lower 8 bytes within the 16 bytes come first.

eg: 100=0xc8,0x42,0x00,0x00

-100=0xc8,0xc2,0x00,0x00

6.6 Modbus error reponse

When the host sends a command and asks for a correct response, one three things will occur:

1) If the command from the host is correct and processable, the flow meter will provide a correct response.

2) If the flowmeter received a command, but detected parity, the error of LRC and CRC will cause no response. The host will process an overtime command.

3) If the flowmeter received a correct command, but cannot process it (read or write a non-existing register etc.), the flowmeter will send an error response

An error response has two byte sections to show how it differs from a correct response.

Function code section: In a correct response, the flowmeter will copy the original function code sent from the host, and the highest bytes of them are all 0(all function codes are smaller than 0x80). In an error response, the flowmeter will set the highest bytes to 1. The host can detect the error code and know the contents of the error when it detects that the highest bytes of function codes are 1.

Value section: In an error response, the flowmeter will reply a byte as the error code to define the content of the error. Please reference to the chart below for the error codes and their definitions:

Code	Name	Meaning
01	Illegal function code	Flowmeter cannot process the function code in a command. It may be this function code can only be used on a new device, or it

		can also indicate that the flowmeter is under error status.
02	Illegal address	The flowmeter cannot process with the address in the command. .
03	Illegal contents of value	The content of the value in the command is not acceptable for the flowmeter.
04	Flow meter function failed	An unrecoverable failure happened when the flowmeter is trying to respond.
05	Reponses	The flowmeter is taking too long to process the command. This error code prevents the host from processing an overtime command.
06	Flowmeter is busy	To alert the host that the flowmeter is processing a command which will take a long time and that the host should resend the command when the flowmeter is free.

6.7 Examples of communication

The flowmeter's Modbus address is 01, baud rate=4800 (C08=01, C09=05, C38=02).

Example 1: Read flow rate F,F=916.49 (4 bytes float)

Host command： 01 03 00 00 00 02 C4 0B

Flowmeter response： 01 03 04 **44 65 1F CE** 77 78

Example 2: Read total flow (current totalizer value)

Host command： 01 03 00 24 00 02 84 00

Flowmeter response：01 03 04 **44 9D 1E 3F** 36 9D

Example 3: Read all of the values displayed on the flowmeter, including flow rate, frequency, pressure, temperature, density, total flow ….. all together 13 value s(52 bytes)

Host command： 01 03 00 00 00 1A c4 01

Flowmeter response：01 03 34

44 65 1F CE（flow rate＝916.49）

42 48 00 00（frequency＝50）

00 00 00 00（reserved＝0）

00 00 00 00（pressure＝0）

00 00 00 00（temperature＝0）

3F 80 00 00（density＝1.00）

00 00 00 00（reserved＝0）

00 00 00 00（reserved）

00 00 00 00（reserved）

00 00 00 00（reserved）

00 00 04 E8（reserved＝1256）

00 00 00 00（reserved＝0）

44 9D 1E 3F（total flow in float＝1256.94）

5A (CRCL)

91 (CRCH)

7 HART communication protocol

7.1 HART commands

7.1.1 Command 0: Read transmitter unique identifier

Command format

Return to the expansion device type code, version number and identification number

Request: None

Response:

Byte 0: 254

Byte 1: Manufacturer's ID

Byte 2: Manufacturer's device type

Byte 3: Number of request preambles

Byte 4: Revision level of universal command

Byte 5: Revision level of transmitter document

Byte 6: Software revision level

Byte 7: Hardware revision level

Byte 8: Flags, none defined at this time

Byte 9-11: Device Identification Number

Test command

Send 0 command: FF FF FF FF FF 02 80 00 00 82; to request information from the instrument

Receive 0 command: FF FF FF FF FF 06 80 00 0E 00 00 FE 1A 1A 05 05 00 00 00 00 AD 18 8C 4F

7.1.2 Command 1: Read primary variable value (PV)

Command format:

Return to primary variable value in float.

Request: None

Response:

Byte 0: Primary variable unit code

Byte 1-4: Primary variable

Remark: The unit code is 75: kg/hour, 19:m3/hour.

Set primary command to flow rate.

Test command:

Send command 1: FF FF FF FF FF 82 9A 1A AD 18 8C 01 00 3A ;to read the IEEE754 float value of the primary variable.

Receive command 1:FF FF FF FF FF 86 9A 1A AD 18 8C 01 07 00 00 13 00 00 00 00 2A

7.1.3 Command 2: Read primary variable's current and percentage value

Command format:

Read the current and percent of the primary variable, the current of primary variable always matches the AO analog current output of the instrument. Percent is not restricted to within 0~100%, if it is beyond the limit of primary variable, it will find the limit of the transmitter.

Request: None

Reponses:

Byte 0-3: Analog output current mA, IEEE754

Byte 4-7: Percent of range, IEEE 754.

Test command:

Send command 2:FF FF FF FF FF 82 9A 1A AD 18 8C 02 00 39 ; to read the current and primary variable percent of range.

Receive command 2:FF FF FF FF FF 86 9A 1A AD 18 8C 02 0A 00 00 40 80 00 00 00 00 00 00 F7

7.1.4 Command 3: Read primary variable current and dynamic variables

Command format:

Read the current of primary variable and 4 preset dynamic variables at maximum. The current of the primary variable always matches the AO analog output current of the instrument. Every type of device has a definition of a relative dynamic variable, for example the secondary variable is the temperature sensor.

Request: None

Response:

Byte 0-3: Analog output current mA, IEEE 754

Byte 4: Primary variable unit code

Byte 5-8: Primary variable, IEEE 754

Byte 9: Secondary variable unit code

Byte 10-13: Secondary variable, IEEE 754

Byte 14: Tertiary variable unit code

Byte 15-18: Tertiary variable, IEEE 754

Byte 19: Quaternary variable unit code

Byte 20-23: Quaternary variable, IEEE 754

Remark: Primary variable is flow rate. The unit code is 75:kg/hour, 19:m3/hour;

Secondary variable is total flow. The unit code is 61:kg, 43:m3;

Tertiary variable is frequency. The unit is Hz;

Quaternary variable is temperature. The unit is 32: ℃;

Test command:

Send command 3:FF FF FF FF FF 82 9A 1A AD 18 8C 03 00 38; to read dynamic variables

Receive command 3:FF FF FF FF FF 86 9A 1A AD 18 8C 03 1A 00 00 40 80 00 00 13 00 00 00 00 2B 48 33 5A 4B 26 00 00 00 00 20 00 00 00 00 B2

7.1.5 Command 6: Write polling address

Command format:

This is a data link management command. The command writes a polling address to the device. This address is used to control the AO of primary variable and providing device ID.

Only when the polling address of the instrument is 0 will the AO output of primary variable be available. If the address is 1~15, AO will be not activated and will not respond, AO will be minimum value; transmission status will be the 3rd status------primary variable AO fixed; max and min alarm not implemented. If polling address is written back to 0, AO will be activated again and will respond.

Request:

Byte 0: Device polling address

Response:

Byte 0: Device polling address

Test command:

Send command 6:FF FF FF FF FF 82 9A 1A AD 18 8C 06 01 00 3C ; to write POLLING ADDRESS

Receive command 6:FF FF FF FF FF 86 9A 1A AD 18 8C 06 03 00 00 00 3A

7.1.6 Command 11: Read unique identifier associated with tag

Command format:

This is a data link management command. This command will return the device type, revision level and device identification number of the device which matches to the tag. Process the command upon receipt of the expansion address or broadcast address. The expansion

addresses in command and response are the same.

Request:

Byte 0-5: Tag, Packed ASCI

Response:

Byte 0: Device type code for expansion

Byte 1: Manufacturer Identification code

Byte 2: Manufacturer device type

Byte 3: Number of request preambles

Byte 4: Revision level of universal command

Byte 5: Revision level of transmitter document

Byte 6: Software revision level

Byte 7: Hardware revision level

Byte 8: Flags, none defined at this time.

Byte 9-11: Device identification number

Test command:

Send command 11: FF FF FF FF FF 82 9A 1A AD 18 8C 0B 00 30 ; Read relevant info of the device such as unique identifier associated with tag

Receive command 11: FF FF FF FF FF 86 9A 1A AD 18 8C 0B 0E 00 00 FE 1A 1A 05 05 00 00 00 00 AD 18 8C FD

7.1.7 Command 12: Read message

Command format:

To read message

Request: None

Response:

Byte 0-23: Message

Test command:

Send command 12:FF FF FF FF FF 82 9A 1A AD 18 8C 0C 00 37 ; read message

Receive command 12:FF FF FF FF FF 86 9A 1A AD 18 8C 0C 1A 00 00 59 00 74 D6 05 8F 49 41 58 80 42 47 25 40 4C 81 04 8F 0C 54 D3 3D 28 20 10

7.1.8 Command 13: Read tag, descriptor, date

Command format:

Read device tag, description and date.

Request: None

Response:

Byte 0-5: Tag,ASCII

Byte 6-17: Descriptor,ASCII

Byte 18-20: Date: day,month,year

Test command:

Send command 13:FF FF FF FF FF 82 9A 1A AD 18 8C 0D 00 36 ;read device tag, descriptor and date

Receive command 13:FF FF FF FF FF 86 9A 1A AD 18 8C 0D 17 00 00 50 11 E0 82 08 20 58 F4 94 15 88 06 30 F5 CD 15 41 52 0F 01 6F E2

7.1.9 Command 14: Read primary variable sensor information: device serial number and limits

Command format:

Read device information

Request: None

Response:

Byte 0-2: Sensor serial number MSB, 24-BIT unsigned integer

Byte 3: Flow rate unit

Byte 4-7: Upper sensor limit of flow rate

Byte 8-11: Lower sensor limit of flow rate

Byte 12-15: Minimum span of flow rate

Test command:

Send command 14: FF FF FF FF FF 82 9A 1A AD 18 8C 0E 00 35; to read primary sensor serial number and limits.

Receive command 14: FF FF FF FF FF 86 9A 1A AD 18 8C 0E 12 00 00 00 00 00 13 43 96 00 00 00 00 00 00 38 D1 B7 17 AC

7.1.10 Command 15: Read primary variable output information

Command format:

Read Primary variable alarm select code, primary variable transfer code, primary variable range values units code, primary variable upper and lower range value, primary variable damping value, write protect code and private label distributor code VIII

Request: None

Response:

Byte0: Alarm select code

Byte1: Primary variable transfer function code

Byte2: Primary variable range values unit code

Byte3-6: Primary variable upper range value, IEEE754

Byte7-10: Primary variable lower range value, IEEE754

Byte11-14: Primary variable damping value, IEEE754, units of seconds

Byte15: Write protect code

Byte16: Private Label Distributor Code

Test command:

Send command 15:FF FF FF FF FF 82 9A 1A AD 18 8C 0F 00 34; Read primary variable output information

Receive command 15:FF FF FF FF FF 86 9A 1A AD 18 8C 0F 13 00 00 00 00 13 43 96 00 00 00 00 00 00 42 20 00 00 FB 12 6E

7.1.11 Command 16: Read final assembly number

Command format:

Read final assembly number.

Request: None

Response:

Byte 0-2: Final assembly number

Test command:

Send command 16:FF FF FF FF FF 82 9A 1A AD 18 8C 10 00 2B; Read final assembly number

Receive command 16: FF FF FF FF FF 86 9A 1A AD 18 8C 10 05 00 00 A8 36 81 35

7.1.12 Command 17: Write message

Command format:

Write message

Request:

Byte 0-23: Message

Response:

Byte 0-23: Message

Test command:

Send command 17:FF FF FF FF FF 82 9A 1A AD 18 8C 11 18 00 01 02 03 04 05 06 07 08 09 0A 0B 0C 0D 0E 0F 10 11 12 13 14 15 16 17 32 ;message

Receive command 17:FF FF FF FF FF 86 9A 1A AD 18 8C 11 1A 00 00 00 01 02 03 04 05 06 07 08 09 0A 0B 0C 0D 0E 0F 10 11 12 13 14 15 16 17 34

7.1.13 Command 18: Write tag, descriptor, date

Command format:

Write tag, descriptor, date.

Request:

Byte 0-5: Tag,ASCII

Byte 6-17: Descriptor,ASCII

Byte 18-20: Date: day, month, year

Response:

Byte 0-5: Tag,ASCII

Byte 6-17: Descriptor,ASCII

Byte 18-20: Date: day, month, year

Test command:

Send command 18: FF FF FF FF FF 82 9A 1A AD 18 8C 12 15 00 00 00 00 00 00 00 00 00 00 00 00 00 00 00 00 00 00 00 00 00 3C

Receive command 18:FF FF FF FF FF FF 86 9A 1A AD 18 8C 12 17 00 00 00 00 00 00 00 00 00 00 00 00 00 00 00 00 00 00 00 00 00 3A

7.1.14 Command 19: Write final assembly number

Command format:

Write final assembly number

Request:

Byte 0-2: Final assembly number

Response:

Byte 0-2: Final assembly number

Test command:

Send command 19: FF FF FF FF FF 82 9A 1A AD 18 8C 13 03 01 02 03 2B ;

Receive command 19: FF FF FF FF FF 86 9A 1A AD 18 8C 13 05 00 00 01 02 03 29

7.1.15 Command 34: Write primary variable damping value

Command format:

Write primary variable damping value. If value is not acceptable, it will respond with alarm.

Request:

Byte 0-3: Damping value, IEEE754

Response:

Byte 0-3: Actual damping value, IEEE754

Test command:

Send command 34: FF FF FF FF FF 82 9A 1A AD 18 8C 22 04 40 00 00 00 5D; Write primary variable damping value

Receive command 34: FF FF FF FF FF 86 9A 1A AD 18 8C 22 06 00 00 40 00 00 00 5B

7.1.16 Command 35: Write primary variable range values

Command format:

The upper and lower limits of the primary variable are independent. The primary variable range unit value that this command received has no effect on the primary variable unit value. The primary value range value will be returned in the unit received.

Most device allows that the measurement range upper limit lower than lower limit to support the device to reverse output.

Request:

Byte 0: Primary variable upper and lower range value unit code

Byte 1-4: Primary variable upper range limit, IEEE 754

Byte 5-8: Primary variable lower range limit, IEEE 754

Response:

Byte 0: Primary variable upper and lower range value unit code

Byte 1-4: Primary variable upper range limit, IEEE 754

Byte 5-8: Primary variable lower range limit, IEEE 754

Test command:

Send command 35: FF FF FF FF FF 82 9A 1A AD 18 8C 23 09 13 40 00 00 00 40 00 00 00 02; Write primary variable range values

Receive command 35: FF FF FF FF FF 86 9A 1A AD 18 8C 23 0B 00 00 13 00 00 00 00 00 00

00 00 04

7.1.17 Command 36: Write primary variable upper limit value

Command format:

Write the primary variable upper limit to current primary variable value. The change of primary variable upper limit value has no effect on the primary variable lower limit.

Request:

NONE

Response:

NONE

Test command:

Send command 36: FF FF FF FF FF 82 9A 1A AD 18 8C 24 00 1F; Write the primary variable upper limit to current primary variable value.

Receive command 36: FF FF FF FF FF 86 9A 1A AD 18 8C 24 02 00 00 19

7.1.18 Command 37: Write primary variable lower limit value

Command format:

Write the primary variable lower limit to current primary variable value. The change of primary variable lower limit value has no effect on the primary variable higher limit.

Request:

NONE

Response:

NONE

Test command:

Send command 37: FF FF FF FF FF 82 9A 1A AD 18 8C 25 00 1E; Write the primary variable lower limit to current primary variable value.

Receive command 37: FF FF FF FF FF 86 9A 1A AD 18 8C 25 02 00 00 18

7.1.19 Command 40: Enter/Exit primary variable current mode

Command format:

Device is set to fixed primary variable current, when primary variable is 0, means to exit primary variable current mode.

Request:

Byte 0-3: Fixed primary variable current level IEEE 754, mA

Response:

Byte 0-3: Actual fixed primary variable current level IEEE 754, mA

Test command:

Send command 40: FF FF FF FF FF 82 9A 1A AD 18 8C 28 04 40 80 00 00 D7

Receive command 40: FF FF FF FF FF 86 9A 1A AD 18 8C 28 06 00 00 40 80 00 00 D1

7.1.20 Command 45: Trim primary variable current DAC zero

Command format:

Trim the primary variable current AO zero, so the present current value is accurately set to its min value.

Before implementing this command, use command 40 to set current to accurate primary variable AO min value. If device is not under fixed primary variable current mode or current has not been set to accurate min value, return response code 9---not under correct current mode.

Request:

Byte 0-3: Externally measured primary variable current level IEEE754, units of mA

Response:

Byte 0-3: Actual measured primary variable current level IEE 754

Test command:

Send command 45: FF FF FF FF FF 82 9A 1A AD 18 8C 2 D 04 40 80 00 00 D2

Receive command 45: FF FF FF FF FF 86 9A 1A AD 18 8C 2D 06 09 00 40 80 00 00 DD : response code is 09, device is not under correct current mode.

7.1.21 Command 46: Trim primary variable current DAC gain

Command format:

Trim primary variable AO gain, so the current value is accurate set to its max value.

Before implementing this command, use command 40 to set current to accurate primary variable AO max value. If device is not under fixed primary variable current mode or current has not been set to accurate max value, need to return response code 9---not under correct current mode.

Request:

Byte 0-3: Externally measured primary variable current level IEEE754, units of mA

Response:

Byte 0-3: Actual measured primary variable current level IEE 754

Test command:

Send command 46: FF FF FF FF FF 82 9A 1A AD 18 8C 2 E 04 40 80 00 00 D1

Receive command 46: FF FF FF FF FF 86 9A 1A AD 18 8C 2E 06 09 00 40 80 00 00 DE : response code is 09, device is not under correct current mode.

7.1.22 Command 140: Reset totalizer

Command format:

Reset totalizer

Request:

NONE

Response:

NONE

Test command:

Send command 140: FF FF FF FF FF 82 9A 1A AD 18 8C 8C 00 B7 Reset totalizer

Receive command 140: FF FF FF FF FF 86 9A 1A AD 18 8C 8C 02 00 00 B1

8 Troubleshooting and repair

8.1 Troubleshooting and repair

Symptom	Cause	Trouble-shooting	Remedy
No display	Power supply failure	Test the voltage on the power supply with a DMM	Re-wire or replace the power supply
	Power supply not connected	Test the voltage on the power supply with a DMM	Wire the power to the proper terminals
	Open circuit in power supply cable	Perform continuity check of the cable with a DMM	Replace the cable
	Incorrect wiring	Perform a visual check/verify correct wiring connections	Re-wire
Displayed flow rate is 0 while there is flow in the pipe	Flow rate is lower than the meter's lower limit	Increase the flow rate to check	Increase the flow rate or replace with a new properly-sized meter
	The value of small signal cut off function is sett too high	Check the small signal cut off setting	Set the small signal cut off to a lower value
	Energy threshold value is too high	Check if the Energy threshold value is too high in spectrum analysis test mode	Set the Energy threshold value to a lower value (Please refer to Note 1)
	Transmitter function failure	Substitute the transmitter with another transmitter of same type to check	Replace the transmitter
	Sensor is damaged	Increase the flow rate to check first, and then install the transmitter on another flowmeter of same size & type to check.	Replace the sensor
	Pipeline blocked or sensor plugged with debris.	If all above possibilities have been eliminated, check the pipe line & meter for blockage.	Re-install the flowmeter
The flowmeter is reading flow while there is no flow in the pipe	Power frequency interference	Verify that the frequency display on meter is stable at the value that same as the power supply frequency	Re-wire the meter with shielded cable.
	There is a high voltage instrument or high frequency interference close to the flowmeter	Check if there is high voltage instrument or high frequency interference close to the flowmeter	Re-locate the flowmeter
	There is heavy	Place hand on the pipeline to	Make use of vibration

	vibration on the pipe line	see if any vibration can be felt	dampening pipe mounts
	Valve not closed / leaky valve	Check pressure and check to see if valve is closed and sealed	Repair the valve
The flow rate reading shows large fluctuations	The flange gasket and the pipe are not concentric	Check the position of the gasket	Re-install the gasket
	The flowmeter body and the pipe line are not concentric	Check the alignment of the flowbody to the pipe	Re-install the meter
	Insufficient straight pipe run upstream or downstream of the meter	Check the straight pipe length and the diameter of the pipeline	Re-locate the flowmeter
	There is heavy vibration on the pipe line	Place hand on the pipeline to see if any vibration can be felt	Make use of vibration dampening pipe mounts
	The pipeline is only partially filled with fluid	Check the fluid level and the location of the meter.	Re-locate the flowmeter
	Two phase flow	Check if there is 2-phase flow based to the pressure and temperature of the fluid.	If the fluid is liquid-solid two phase flow, install a filter upstream of the meter. If the fluid is liquid-gas two phase flow, install a gas eliminator upstream of the meter.
	Transmitter failure	Replace the transmitter with another transmitter of same type to check	Replace the transmitter
There is large difference between the flow reading and the expected process flow rate	No density compensation for steam measurement	Check the density compensation devices and the setting	Correct settings in parameter setting menu
	The expected flow rate is wrong	Use another flowmeter to confirm the actual flow rate	
	Incorrect menu settings	Check the settings of meter K factor, upper and lower limit of flow rate	Correct settings in parameter setting menu

Note 1: Enter code setting mode and set C49=12. Press the ⇕ button to check the current energy level of the vortex flow signal and vibration signal. E1 is the energy of vortex flow signal; please set the energy threshold value lower than the displayed value. E.1 is the energy of vibration, please set the energy threshold value lower than the displayed value. Set above value in D017 (Energy threshold of vortex flow signal) and D018 (Energy threshold of

vibration), than set C49 back to 00.

8.2 Diagnostic Codes

ALVT vortex flowmeter display can also indicate the self-diagnose code as below：

Error code	Problem	Remedy
Err-003	Temperature sensor disconnected	Check Temperature sensor
Err-004	Pressure sensor disconnected	Check pressure sensor
Err-005	About to exceed/overflow total flow	This is a reminder message
Err-006	Display value over limit	The value is over the physical limit of the display
Err-011	Superheated steam temperature is over limit	Reduce the steam temperature
Err-012	Superheated steam pressure is over limit	Reduce the steam pressure
Err-013	Button is stuck/ depressed for too long	Check the button
Err-014	Reset code setting failed	Check EEPROM
Err-015	Reset digital setting failed	Check EEPROM
Err-016	Read total flow error	Check EEPROM
Err-017	Temperature calibration setting is wrong	Check the of temperature calibration cert
Err-018	Pressure calibration setting is wrong	Check the pressure calibration cert
Err-020	Flow rate limit setting is incorrect	Check the flow rate limit setting
Err-021	Temperature limit setting is incorrect	Check the temperature limit setting
Err-022	Pressure limit setting is incorrect	Check the pressure limit setting
Err-023	Communication connection error	Check the communication link
Err-024	Setting is incorrect when using aga_nx_19 to calculate the compressibility factor	Check if the setting for compressibility factor is correct
Err-025	Frequency output for total flow is over limit	Reset the total flow frequency output factor
Err-026	3V power source failure	Check the circuit board

VaporTec®

Especialistas en Vapor